Work Order ID 59171

Thursday, May 27, 2010 12:36:03 PM

Item ID: D350-748-201 **Accept** **Setup Start**

Revision ID: **Stop**

Item Name: Crosstube Installation, High Aft

Start Date: 5/27/2010 **Start Qty:** 1.00 **Cust Item ID:**

Required Date: 6/11/2010 **Req'd Qty:** 1.00 **Customer:**

Reference:

Approvals: **Process Plan:** _____ **Date:** 10-5-27 **Tooling:** _____ **Date:** _____ **Run Start**

QC: _____ **Date:** _____ **SPC (Y/N):** _____ **Date:** _____ **Stop**

Sequence ID/ Work Center ID	Operation Description	Set Up/ Run Hours	Tool ID	Tool #	Plan Code	Accept Qty	Reject Qty	Reject Number	Insp. Stamp
Draw Nbr	**Revision Nbr**								
D350-748-241	Rev E								
100	DOCUMENT CONTROL	0.00							
DC	**Memo**	0.00							
Document Control	Photocopy bluefile & type labels per PPPD350-748-201		CHG001						
110	BENDING MACHINE - CROSSTUBES	0.00							
CNC Bend 2	**Memo**	0.00							
CNC Alpha 160 Bender	Bend tube as per Dwg D350-748-241 using CNC bender program D350A and Folio FT_____								
120	QC15- Crosstube Dimensional Check	0.00							
QC	**Memo**	0.00							
Quality Control									

(1X) MB 10-06-08

10.06.09 / 10/06/09

Dart Aerospace Ltd

W/O:		WORK ORDER CHANGES					
DATE	STEP	PROCEDURE CHANGE	By	Date	Qty	Approval Chief Eng / Prod Mgr	Approval QC Inspector

Part No: _____ **PAR #:** _____ **Fault Category:** _____ **NCR:** Yes No **DQA:** _____ **Date:** _____

Resolution: _____ **Disposition:** _____ **QA: N/C Closed:** _____ **Date:** _____

NCR:		WORK ORDER NON-CONFORMANCE (NCR)						
DATE	STEP	Description of NC Section A	Corrective Action Section B			Verification Section C	Approval Chief Eng	Approval QC Inspector
			Initial Chief Eng	Action Description Chief Eng	Sign & Date			

NOTE: Date & initial all entries

H:\fFORMS\Quality Assurance\approved QA\NCRWO RevE

Work Order ID 59171

Thursday, May 27, 2010 12:36:03 PM

Item ID: D350-748-201 **Accept** **Setup Start** **Stop**

Revision ID:

Item Name: Crosstube Installation, High Aft

Start Date: 5/27/2010 **Start Qty:** 1.00 **Cust Item ID:**

Required Date: 6/11/2010 **Req'd Qty:** 1.00 **Customer:**

Reference:

Approvals: **Process Plan:** _____ **Date:** _____ **Tooling:** _____ **Date:** _____ **Run Start** **Stop**

QC: _____ **Date:** _____ **SPC (Y/N):** _____ **Date:** _____

Sequence ID/ Work Center ID	Operation Description	Set Up/ Run Hours	Tool ID	Tool #	Plan Code	Accept Qty	Reject Qty	Reject Number	Insp. Stamp
130		0.00							
Crosstubes	Crosstubes								
Crosstubes	**Memo**	0.00							
	1-Drill Tube as per Dwg D350-748-241 Using DT8876 Drill Jigs, Set-up drill table as per QSI 010								
	2-Deburr								
	3-Engrave Part # and Batch # as per Dwg D350-748-241								
	4-Remove all marks from tube within limits of D350-748-241								
	5- Apply a light coat of LPS3 on the interior of tube Batch: 109956								
140	QC6- Inspect dimensions to drawing	0.00							
QC	**Memo**	0.00							
Quality Control									

MD 10-06-09

AVM 10.06.09

Dart Aerospace Ltd

W/O:		WORK ORDER CHANGES					
DATE	STEP	PROCEDURE CHANGE	By	Date	Qty	Approval Chief Eng / Prod Mgr	Approval QC Inspector

Part No: _____ PAR #: _____ Fault Category: _____ NCR: Yes No DQA: _____ Date: _____

Resolution: _____ Disposition: _____ QA: N/C Closed: _____ Date: _____

NCR:		WORK ORDER NON-CONFORMANCE (NCR)						
DATE	STEP	Description of NC Section A	Corrective Action Section B			Verification Section C	Approval Chief Eng	Approval QC Inspector
			Initial Chief Eng	Action Description Chief Eng	Sign & Date			

NOTE: Date & initial all entries

H:\fFORMS\Quality Assurance\approved QA\NCRWO RevE

Work Order ID 59171

Thursday, May 27, 2010 12:36:03 PM

Item ID: D350-748-201 **Accept** **Setup Start**

Revision ID: **Stop**

Item Name: Crosstube Installation, High Aft

Start Date: 5/27/2010 **Start Qty:** 1.00 **Cust Item ID:**

Required Date: 6/11/2010 **Req'd Qty:** 1.00 **Customer:**

Reference:

Approvals: **Process Plan:** _____ **Date:** _____ **Tooling:** _____ **Date:** _____ **Run Start**

QC: _____ **Date:** _____ **SPC (Y/N):** _____ **Date:** _____ **Stop**

Sequence ID/ Work Center ID	Operation Description	Set Up/ Run Hours	Tool ID	Tool #	Plan Code	Accept Qty	Reject Qty	Reject Number	Insp. Stamp
150	Outsource process-Cadplate per QSI017 4.1.9.1	0.00							
Outsource3	**Memo**	0.00							
Outsource process - Cad plate	Issue P/O: _____ Stress relief at 375° for 5 hours Magnetic Particle Inspect per ASTM E1444 Cadium Plate per AMS-QQ-P-416B, Class 1, Type 2 Embrittle relief at 375° for 8 hours, Chromate Treat Possibe Supplier: Southwest United Industries Ensure Certificate of Conformity is attached								
160	Receive & Inspect for Damage & Mat'l Certs	0.00							
Packaging	**Memo**	0.00							
Packaging	Ensure certificate of conformity is attached								
170	QC5- Inspect part completeness to step on W/O	0.00							
QC	**Memo**	0.00							
Quality Control									

Dart Aerospace Ltd

W/O:		WORK ORDER CHANGES					
DATE	STEP	PROCEDURE CHANGE	By	Date	Qty	Approval Chief Eng / Prod Mgr	Approval QC Inspector

Part No: _____ PAR #: _____ Fault Category: _____ NCR: Yes No DQA: _____ Date: _____

Resolution: _____ Disposition: _____ QA: N/C Closed: _____ Date: _____

NCR:		WORK ORDER NON-CONFORMANCE (NCR)						
DATE	STEP	Description of NC Section A	Corrective Action Section B			Verification Section C	Approval Chief Eng	Approval QC Inspector
			Initial Chief Eng	Action Description Chief Eng	Sign & Date			

NOTE: Date & initial all entries

H:\fFORMS\Quality Assurance\approved QA\NCRWO RevE

Work Order ID 59171

Thursday, May 27, 2010 12:36:03 PM

Item ID: D350-748-201 **Accept** **Setup Start** **Stop**

Revision ID:

Item Name: Crosstube Installation, High Aft

Start Date: 5/27/2010 **Start Qty:** 1.00 **Cust Item ID:**

Required Date: 6/11/2010 **Req'd Qty:** 1.00 **Customer:**

Reference:

Approvals: **Process Plan:** _____ **Date:** _____ **Tooling:** _____ **Date:** _____ **Run Start**

QC: _____ **Date:** _____ **SPC (Y/N):** _____ **Date:** _____ **Stop**

Sequence ID/ Work Center ID	Operation Description	Set Up/ Run Hours	Tool ID	Tool #	Plan Code	Accept Qty	Reject Qty	Reject Number	Insp. Stamp
180	SprayPaint	0.00							
SprayPaint	**Memo**	0.00							
Spray Painting	1-Prime inside crosstube as per QSI 005 4.2 2-Paint Outside of Tube as per Dart QSI 005 4.2								
190	QC14- Inspect Spray Paint	0.00							
QC	**Memo**	0.00							
Quality Control	Then,Wrap in plastic bag to protect from scratches								
200	Crosstubes	0.00							
Crosstubes	**Memo**	0.00							
Crosstubes	1-Install Ground wire Insert,then insert screw and washer 2-Install Abraision strips as per Dwg D350-748-241 & QSI 035. 3-Install supports Using Dt8876 as per Dwg D350-748-241,Torque to 60-80 IN-LBS								

Dart Aerospace Ltd

W/O:		WORK ORDER CHANGES					
DATE	STEP	PROCEDURE CHANGE	By	Date	Qty	Approval Chief Eng / Prod Mgr	Approval QC Inspector

Part No: _____ **PAR #:** _____ **Fault Category:** _____ **NCR:** Yes No **DQA:** _____ **Date:** _____

Resolution: _____ **Disposition:** _____ **QA: N/C Closed:** _____ **Date:** _____

NCR:		WORK ORDER NON-CONFORMANCE (NCR)						
DATE	STEP	Description of NC Section A	Corrective Action Section B			Verification Section C	Approval Chief Eng	Approval QC Inspector
			Initial Chief Eng	Action Description Chief Eng	Sign & Date			

NOTE: Date & initial all entries

H:\fFORMS\Quality Assurance\approved QA\NCRWO RevE

Work Order ID 59171

Thursday, May 27, 2010 12:36:03 PM

Item ID: D350-748-201 **Accept** **Setup** **Start**

Revision ID: **Stop**

Item Name: Crosstube Installation, High Aft

Start Date: 5/27/2010 **Start Qty:** 1.00 **Cust Item ID:**

Required Date: 6/11/2010 **Req'd Qty:** 1.00 **Customer:**

Reference:

Approvals: **Process Plan:** _____ **Date:** _____ **Tooling:** _____ **Date:** _____ **Run** **Start**

QC: _____ **Date:** _____ **SPC (Y/N):** _____ **Date:** _____ **Stop**

Sequence ID/ Work Center ID	Operation Description	Set Up/ Run Hours	Tool ID	Tool #	Plan Code	Accept Qty	Reject Qty	Reject Number	Insp. Stamp
210	QC5- Inspect part completeness to step on W/O	0.00							
QC	**Memo**	0.00							
Quality Control									
220	Pick Kit	0.00							
Packaging	**Memo**	0.00							
Packaging									
230	QC4- 100% Inspect kits for completeness	0.00							
QC	**Memo**	0.00							
Quality Control									

Dart Aerospace Ltd

W/O:		WORK ORDER CHANGES					
DATE	STEP	PROCEDURE CHANGE	By	Date	Qty	Approval Chief Eng / Prod Mgr	Approval QC Inspector

Part No: _____ **PAR #:** _____ **Fault Category:** _____ **NCR:** Yes No **DQA:** _____ **Date:** _____

Resolution: _____ **Disposition:** _____ **QA: N/C Closed:** _____ **Date:** _____

NCR:		WORK ORDER NON-CONFORMANCE (NCR)						
DATE	STEP	Description of NC Section A	Corrective Action Section B			Verification Section C	Approval Chief Eng	Approval QC Inspector
			Initial Chief Eng	Action Description Chief Eng	Sign & Date			

NOTE: Date & initial all entries

H:\fFORMS\Quality Assurance\approved QA\NCRWO RevE

Work Order ID 59171

Thursday, May 27, 2010 12:36:03 PM

Item ID: D350-748-201

Revision ID:

Item Name: Crosstube Installation, High Aft

Start Date: 5/27/2010 **Start Qty:** 1.00

Required Date: 6/11/2010 **Req'd Qty:** 1.00

Reference:

Accept

Setup Start

Stop

Cust Item ID:

Customer:

Run Start

Stop

Approvals: **Process Plan:** _____ **Date:** _____ **Tooling:** _____ **Date:** _____

QC: _____ **Date:** _____ **SPC (Y/N):** _____ **Date:** _____

Sequence ID/ Work Center ID	Operation Description	Set Up/ Run Hours	Tool ID	Tool #	Plan Code	Accept Qty	Reject Qty	Reject Number	Insp. Stamp
240	Packaging	0.00							
Packaging	**Memo**	0.00							
Packaging	Identify and pack for shipping as per PPPD350-748-201 Location:_____ PPP Rev:_____								
250	QC21- Final Inspection - Work Order Release	0.00							
QC	**Memo**	0.00							
Quality Control									

Dart Aerospace Ltd

W/O:		WORK ORDER CHANGES					
DATE	STEP	PROCEDURE CHANGE	By	Date	Qty	Approval Chief Eng / Prod Mgr	Approval QC Inspector

Part No: _____ **PAR #:** _____ **Fault Category:** _____ **NCR:** Yes No **DQA:** _____ **Date:** _____

Resolution: _____ **Disposition:** _____ **QA: N/C Closed:** _____ **Date:** _____

NCR:		WORK ORDER NON-CONFORMANCE (NCR)						
DATE	STEP	Description of NC Section A	Corrective Action Section B			Verification Section C	Approval Chief Eng	Approval QC Inspector
			Initial Chief Eng	Action Description Chief Eng	Sign & Date			

NOTE: Date & initial all entries

H:\fFORMS\Quality Assurance\approved QA\NCRWO RevE

Picklist Print

Thursday, May 27, 2010 12:36:07 PM

Work Order ID: 59171

Parent Item: D350-748-201

Parent Item Name: Crosstube Installation, High Aft

Start Date: 5/27/2010 **Required Date:** 6/11/2010

Start Qty: 1.00 **Required Qty:** 1.00

Comments:
IPP Rev: A New Issue 06-07-05 JLM
IPP Rev: B Update qty of MS21042L5 06-09-12 KJ
IPP Rev C Combined manufacturing 08.04.02 EC verified by: DD
IPP Rev:D 08-06-24 revD as per dwg DD verified by:EC

D350-748-241TRN Crosstube Turning Detail		Manufactured	No	110	Each	1.0000	1	1	B-55372 MB 10-06-08

Location	Loc Qty	Loc Code
LG	1	
47170	1	

ALS4-1032-225 Insert		Purchased	No	200	Each	7,062.000	1	1	

Location	Loc Qty	Loc Code
PK011	7062	
110768	7062	

AN960JD10 Washer	NAS1149D0363J	Purchased	No	200	Each	0.0000	1	1	
D2856-400 Abraison Strip		Manufactured	No	200	f	269.1088	1.181	1.243158	

Location	Loc Qty	Loc Code
ST403	269.1088	
50593	62.0568	
56626	207.052	

1- cut as per dwg D2856

Dart Aerospace Ltd

W/O:		WORK ORDER CHANGES					
DATE	STEP	PROCEDURE CHANGE	By	Date	Qty	Approval Chief Eng / Prod Mgr	Approval QC Inspector

Part No: _____ PAR #: _____ Fault Category: _____ NCR: Yes No DQA: _____ Date: _____

Resolution: _____ Disposition: _____ QA: N/C Closed: _____ Date: _____

NCR:		WORK ORDER NON-CONFORMANCE (NCR)						
DATE	STEP	Description of NC Section A	Corrective Action Section B			Verification Section C	Approval Chief Eng	Approval QC Inspector
			Initial Chief Eng	Action Description Chief Eng	Sign & Date			

NOTE: Date & initial all entries

H:\fFORMS\Quality Assurance\approved QA\NCRWO RevE

Picklist Print

Thursday, May 27, 2010 12:36:07 PM

Work Order ID: 59171

Parent Item: D350-748-201

Parent Item Name: Crosstube Installation, High Aft

Start Date: 5/27/2010 **Required Date:** 6/11/2010

Start Qty: 1.00 **Required Qty:** 1.00

Comments:
IPP Rev: A New Issue 06-07-05 JLM
IPP Rev: B Update qty of MS21042L5 06-09-12 KJ
IPP Rev C Combined manufacturing 08.04.02 EC verified by: DD
IPP Rev:D 08-06-24 revD as per dwg DD verified by:EC

D3502-1 Support	Manufactured	No		200	Each	67.0000	2	2

Location	Loc Qty	Loc Code
ST066	67	
47120	1	
50287	38	
52903	28	

MS21920-20 Clamp (per MIL-DTL-8783C)	Purchased	No		200	Each	111.0000	2	2

Location	Loc Qty	Loc Code
LG	111	
112307	2	
112624	32	
112793	3	
114687	50	
114779	24	

MS27039-1-10 Screw	Purchased	No		200	Each	150.0000	1	1

Location	Loc Qty	Loc Code
ST291	150	
112794	50	
112940	100	

Dart Aerospace Ltd

W/O:		WORK ORDER CHANGES					
DATE	STEP	PROCEDURE CHANGE	By	Date	Qty	Approval Chief Eng / Prod Mgr	Approval QC Inspector

Part No: _____ **PAR #:** _____ **Fault Category:** _____ **NCR:** Yes No **DQA:** _____ **Date:** _____

Resolution: _____ **Disposition:** _____ **QA: N/C Closed:** _____ **Date:** _____

NCR:		WORK ORDER NON-CONFORMANCE (NCR)						
DATE	STEP	Description of NC Section A	Corrective Action Section B			Verification Section C	Approval Chief Eng	Approval QC Inspector
			Initial Chief Eng	Action Description Chief Eng	Sign & Date			

NOTE: Date & initial all entries

H:\fFORMS\Quality Assurance\approved QA\NCRWO RevE

Picklist Print

Thursday, May 27, 2010 12:36:07 PM

Work Order ID: 59171

Parent Item: D350-748-201

Parent Item Name: Crosstube Installation, High Aft

Start Date: 5/27/2010 **Required Date:** 6/11/2010

Start Qty: 1.00 **Required Qty:** 1.00

Comments:
IPP Rev: A New Issue 06-07-05 JLM
IPP Rev: B Update qty of MS21042L5 06-09-12 KJ
IPP Rev C Combined manufacturing 08.04.02 EC verified by: DD
IPP Rev:D 08-06-24 revD as per dwg DD verified by:EC

AN4-41A Bolt	Purchased	No	220	Each	134.0000	8	8	

Location	Loc Qty	Loc Code
ST360	134	
110731	2	
111424	26	
112082	6	
113359	100	

AN4-6A Bolt	Purchased	No	220	Each	926.0000	16	16	

Location	Loc Qty	Loc Code
ST356	926	
112933	96	
113149	600	
114523	30	
114615	200	

AN5-32A Bolt	Purchased	No	220	Each	186.0000	4	4	

Location	Loc Qty	Loc Code
ST340	186	
113121	36	
114056	100	
114405	50	

AN960JD416 NAS1149D0463J Washer	Purchased	No	220	Each	0.0000	32	32	

Dart Aerospace Ltd

W/O:		WORK ORDER CHANGES					
DATE	STEP	PROCEDURE CHANGE	By	Date	Qty	Approval Chief Eng / Prod Mgr	Approval QC Inspector

Part No: _____ PAR #: _____ Fault Category: _____ NCR: Yes No DQA: _____ Date: _____

Resolution: _____ Disposition: _____ QA: N/C Closed: _____ Date: _____

NCR:		WORK ORDER NON-CONFORMANCE (NCR)						
DATE	STEP	Description of NC Section A	Corrective Action Section B			Verification Section C	Approval Chief Eng	Approval QC Inspector
			Initial Chief Eng	Action Description Chief Eng	Sign & Date			

NOTE: Date & initial all entries

H:\fFORMS\Quality Assurance\approved QA\NCRWO RevE

Picklist Print

Thursday, May 27, 2010 12:36:07 PM

Work Order ID: 59171

Parent Item: D350-748-201

Parent Item Name: Crosstube Installation, High Aft

Start Date: 5/27/2010 **Required Date:** 6/11/2010

Start Qty: 1.00 **Required Qty:** 1.00

Comments:
IPP Rev: A New Issue 06-07-05 JLM
IPP Rev: B Update qty of MS21042L5 06-09-12 KJ
IPP Rev C Combined manufacturing 08.04.02 EC verified by: DD
IPP Rev:D 08-06-24 revD as per dwg DD verified by:EC

AN960JD516	NAS1149D0563J	Purchased	No		220	Each	0.0000	8	8
Washer									
D3500-1		Manufactured	No		220	Each	36.0000	4	4
Saddle									

Location	Loc Qty	Loc Code
ST425	36	
47119	1	
52326	9	
55605	26	

D3501-1		Manufactured	No		220	Each	479.0000	16	16
Bushing									

Location	Loc Qty	Loc Code
ST066	479	
45402	16	
45918	159	
48268	204	
53779	100	

Dart Aerospace Ltd

W/O:		WORK ORDER CHANGES					
DATE	STEP	PROCEDURE CHANGE	By	Date	Qty	Approval Chief Eng / Prod Mgr	Approval QC Inspector

Part No: _____ PAR #: _____ Fault Category: _____ NCR: Yes No DQA: _____ Date: _____

Resolution: _____ Disposition: _____ QA: N/C Closed: _____ Date: _____

NCR:		WORK ORDER NON-CONFORMANCE (NCR)						
DATE	STEP	Description of NC Section A	Corrective Action Section B			Verification Section C	Approval Chief Eng	Approval QC Inspector
			Initial Chief Eng	Action Description Chief Eng	Sign & Date			

NOTE: Date & initial all entries

H:\fFORMS\Quality Assurance\approved QA\NCRWO RevE

Picklist Print

Thursday, May 27, 2010 12:36:07 PM

Work Order ID: 59171

Parent Item: D350-748-201

Parent Item Name: Crosstube Installation, High Aft

Start Date: 5/27/2010 **Required Date:** 6/11/2010

Start Qty: 1.00 **Required Qty:** 1.00

Comments:
IPP Rev: A New Issue 06-07-05 JLM
IPP Rev: B Update qty of MS21042L5 06-09-12 KJ
IPP Rev C Combined manufacturing 08.04.02 EC verified by: DD
IPP Rev:D 08-06-24 revD as per dwg DD verified by:EC

MS21042L4 Nut	Purchased	No		220	Each	2,605.000	24	24

Location		Loc Qty	Loc Code
ST139		2	
	111827	2	
ST300		2603	
	113422	80	
	114523	1515	
	114718	1000	
	9063	8	

MS21042L5 Nut	Purchased	No		220	Each	515.0000	4	4

Location		Loc Qty	Loc Code
ST300		515	
	113523	12	
	113537	3	
	114437	100	
	114449	400	

Dart Aerospace Ltd

W/O:		WORK ORDER CHANGES					
DATE	STEP	PROCEDURE CHANGE	By	Date	Qty	Approval Chief Eng / Prod Mgr	Approval QC Inspector

Part No: _____ **PAR #:** _____ **Fault Category:** _____ **NCR:** Yes No **DQA:** _____ **Date:** _____

Resolution: _____ **Disposition:** _____ **QA: N/C Closed:** _____ **Date:** _____

NCR:		WORK ORDER NON-CONFORMANCE (NCR)						
DATE	STEP	Description of NC Section A	Corrective Action Section B			Verification Section C	Approval Chief Eng	Approval QC Inspector
			Initial Chief Eng	Action Description Chief Eng	Sign & Date			

NOTE: Date & initial all entries

H:\fFORMS\Quality Assurance\approved QA\NCRWO RevE

DART AEROSPACE LTD	Work Order:	39171
Description: Crosstube High Aft (AS350/355)	Part Number:	D350-748-201
Inspection Dwg: D350-748-241 **Rev:** D		Page 1 of 1

Required Dimension	Min	Max
Height	31.22	31.48
1/2 Span	40.77	41.03
Angle	75	77
Total Span	81.54	82.06

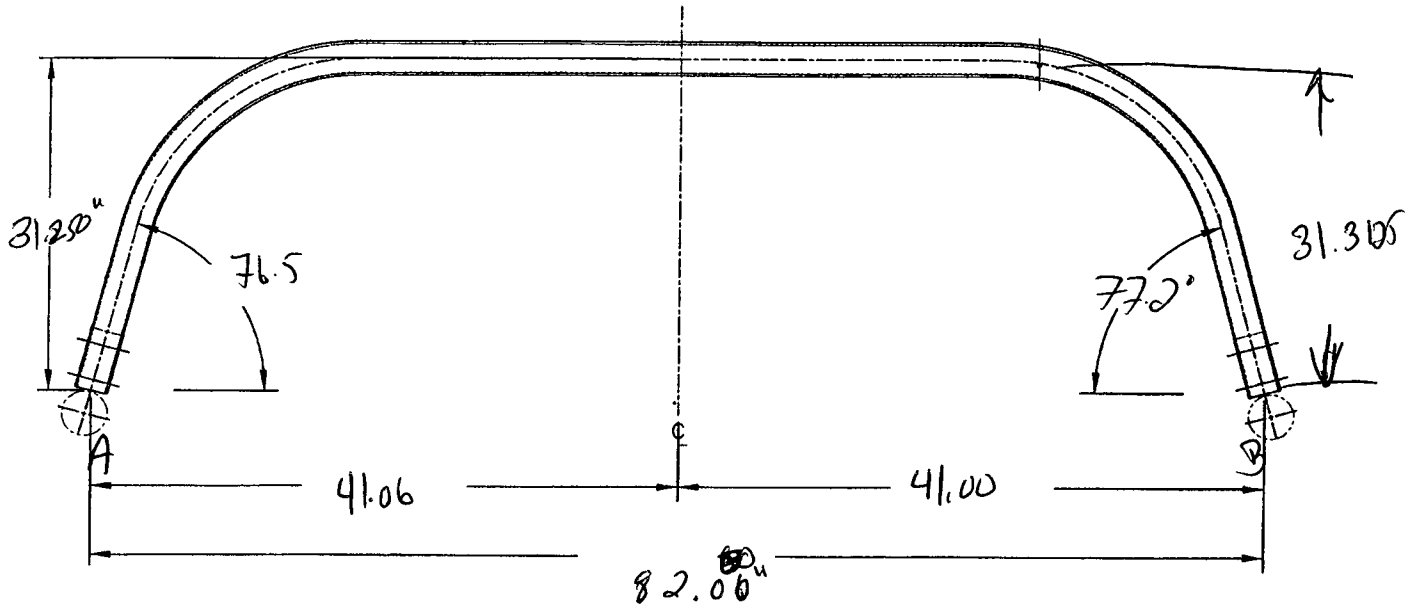

Comments
twist = 0.284"
OK 10.06.09

QC15 Inspection	
Date	10/06/09

Rev	Date	Change	Revised by	Approved
A	07.02.06	New Issue	KJ/JM	

Dart Aerospace Ltd

W/O:		WORK ORDER CHANGES					
DATE	STEP	PROCEDURE CHANGE	By	Date	Qty	Approval Chief Eng / Prod Mgr	Approval QC Inspector

Part No: _____ PAR #: _____ Fault Category: _____ NCR: Yes No DQA: _____ Date: _____

Resolution: _____ Disposition: _____ QA: N/C Closed: _____ Date: _____

NCR:		WORK ORDER NON-CONFORMANCE (NCR)						
DATE	STEP	Description of NC Section A	Corrective Action Section B			Verification Section C	Approval Chief Eng	Approval QC Inspector
			Initial Chief Eng	Action Description Chief Eng	Sign & Date			

NOTE: Date & initial all entries

H:\fFORMS\Quality Assurance\approved QA\NCRWO RevE

Item	Qty -241	Part Number	Description
1	X	D350-748-241	CROSSTUBE ASSEMBLY (AS 350/355 HI AFT)
2	1	D6018-125	CROSSTUBE
3	2	D3502-1	SUPPORT
4	2	D2856-400-710	ABRASION STRIP
5	1	AELS-1032-225	INSERT
6	1	NAS1149D0363J	WASHER (OR AN960JD10)
7	2	MS21920-20	CLAMP (PER DART SPEC. M-MS21920-20)
8	1	MS27039-1-10	SCREW

GENERAL NOTES:

1) MATERIAL: MANUFACTURED FROM D6018-125
   FINISHED LENGTH = 122.700±0.06
2) FINISH: MAGNETIC PARTICLE INSPECT PER DART QSI 038 4.2
   CADMIUM PLATE PER AMS-QQ-P-416B, CLASS 1, TYPE II
   PRIME INSIDE AND OUTSIDE PER DART QSI 005 4.2
   PAINT OUTSIDE PER DART QSI 005 4.2
3) TOLERANCES ARE PER DART QSI 018 UNLESS OTHERWISE NOTED.
4) UNITS: INCHES UNLESS OTHERWISE NOTED.
5) BREAK SHARP EDGES: 0.005 TO 0.010 MAX.
6) IDENTIFICATION: SCRIBE DART PART NUMBER "D350-748-241" AND BATCH NUMBER ON INSIDE OF CUFF USING VIBRATING STYLUS.
7) WEIGHT: 29.85 lbs
8) PART IS SYMMETRIC ABOUT CENTERLINE, EXCEPT FOR Ø0.297 HOLE.
9) RUN CUTTER OFF PART WHERE INDICATED. BLEND OUT ALL EDGES FROM MACHINING LONGITUDINALY, TRANSITION SHOULD BE SMOOTH. NOTE: ALL HOLES ARE DRILLED AFTER BENDING.
10) BEND PROGRESSIVELY WITH A MINIMUM OF 7 PASSES. MAXIMUM TUBE FLATTENING DUE TO BENDING IS 6% BASED ON O.D.
11) HEAT TREAT TO MIN. 180 KSI PER MIL-T-6736 OR AMS 2759-1C AFTER TURNING.
12) INSTALL D2856-400-710 ABRASION STRIPS WITH A GAP ON BOTTOM SIDE OF CROSSTUBE, CENTERED OPPOSITE D3502-1 SUPPORT, PER QSI 035.
13) EXTREME CARE MUST BE TAKEN TO PROTECT THE OUTSIDE SURFACE OF THE TUBE. THE OUTSIDE SURFACE MUST BE SMOOTH AND FREE FROM SURFACE DEFECTS SUCH AS SCRATCHES, NICKS, OR DENTS. DEFECTS UP TO 0.005" MAY BE BLENDED OUT LONGITUDINALLY. CIRCUMFERENTIAL GRIND MARKS ARE UNACCEPTABLE. WHEN DRILLING HOLES EXTREME CARE MUST BE TAKEN AND CAREFUL DEBURRING PERFORMED TO ENSURE A CLEAN HOLE WITH NO CRACKING/CHIPPING/GROOVES.
14) TORQUE CLAMPS 60 TO 80 IN-LB. ENSURE AT LEAST 1.5 THREADS SHOWING IN SAFETY AND THAT NUT HAS NOT BOTTOMED-OUT AFTER TORQUING.

SHOP COPY
RETURN TO
ENGINEERING
UNCONTROLLED COPY
SUBJECT TO AMENDMENT
WITHOUT NOTICE
WORK ORDER
NO. 59171
BJ 10-5-71

RELEASED
2009 -10- 29

REV.	DESCRIPTION	BY	DATE
E	REVISE GENERAL NOTES; UPDATE TO CURRENT STANDARDS; RELOCATED FLAG #6 PER PAR 08-046 (ZN A8-3); ADD TOLERANCES (ZN C6-3, D2-3)	RF	09.09.30
D	MAG. PARTICLE AND CAD PLATE AS MFD.	CP	06.10.31
C	ADD CAD PLATING	CP	06.08.14
B	ADD D6018-125 & PRIME AND PAINT	CP	06.06.30
A	NEW ISSUE	CP	06.03.31

DESIGN		DART AEROSPACE LTD HAWKESBURY, ONTARIO, CANADA
DRAWN	RF	
CHECKED		DRAWING NO. REV. E
MFG. APPR.		D350-748-241 SHEET 1 OF 4
APPROVED		TITLE SCALE
DE APPR.		CROSSTUBE (AS 350/355 HI AFT) NTS
DATE	09.09.30	

COPYRIGHT © 2006 BY DART AEROSPACE LTD
THIS DOCUMENT IS PRIVATE AND CONFIDENTIAL AND IS SUPPLIED ON THE EXPRESS CONDITION THAT IT IS NOT TO BE USED FOR ANY PURPOSE OR COPIED OR COMMUNICATED TO ANY OTHER PERSON WITHOUT WRITTEN PERMISSION FROM DART AEROSPACE LTD

Dart Aerospace Ltd

W/O:		WORK ORDER CHANGES					
DATE	STEP	PROCEDURE CHANGE	By	Date	Qty	Approval Chief Eng / Prod Mgr	Approval QC Inspector

Part No: _____ PAR #: _____ Fault Category: _____ NCR: Yes No DQA: _____ Date: _____

Resolution: _____ Disposition: _____ QA: N/C Closed: _____ Date: _____

NCR:		WORK ORDER NON-CONFORMANCE (NCR)						
DATE	STEP	Description of NC Section A	Corrective Action Section B			Verification Section C	Approval Chief Eng	Approval QC Inspector
			Initial Chief Eng	Action Description Chief Eng	Sign & Date			

NOTE: Date & initial all entries

H:\fFORMS\Quality Assurance\approved QA\NCRWO RevE

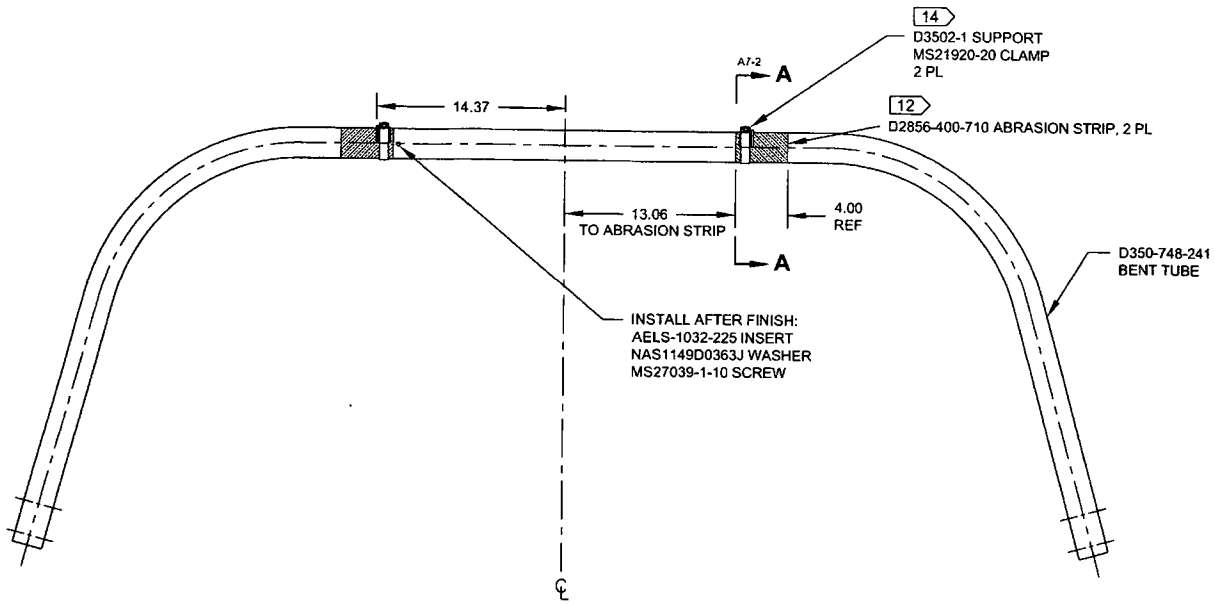

D350-748-241
ASSEMBLY DETAIL

W 059171

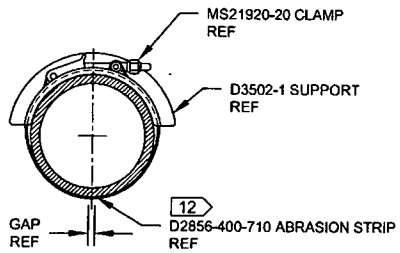

SECTION A-A D4-2
SCALE 4X

RELEASED
2009 -10- 29
MP

DESIGN	gp	**DART AEROSPACE LTD** HAWKESBURY, ONTARIO, CANADA
DRAWN	RF	
CHECKED	gp	DRAWING NO. D350-748-241 — REV. E — SHEET 2 OF 4
MFG. APPR.	DS	
APPROVED	MP	TITLE: CROSSTUBE (AS 350/355 HI AFT) — SCALE: NTS
DE APPR.	[illegible]	
DATE	09.09.30	

COPYRIGHT © 2008 BY DART AEROSPACE LTD
THIS DOCUMENT IS PRIVATE AND CONFIDENTIAL, AND IS SUPPLIED ON THE EXPRESS CONDITION THAT IT IS NOT TO BE USED FOR ANY PURPOSE OR COPIED OR COMMUNICATED TO ANY OTHER PERSON WITHOUT WRITTEN PERMISSION FROM DART AEROSPACE LTD.

Dart Aerospace Ltd

W/O:		WORK ORDER CHANGES					
DATE	STEP	PROCEDURE CHANGE	By	Date	Qty	Approval Chief Eng / Prod Mgr	Approval QC Inspector

Part No: _____ **PAR #:** _____ **Fault Category:** _____ **NCR:** Yes No **DQA:** _____ **Date:** _____

Resolution: _____ **Disposition:** _____ **QA: N/C Closed:** _____ **Date:** _____

NCR:		WORK ORDER NON-CONFORMANCE (NCR)						
DATE	STEP	Description of NC Section A	Corrective Action Section B			Verification Section C	Approval Chief Eng	Approval QC Inspector
			Initial Chief Eng	Action Description Chief Eng	Sign & Date			

NOTE: Date & initial all entries

H:\fFORMS\Quality Assurance\approved QA\NCRWO RevE

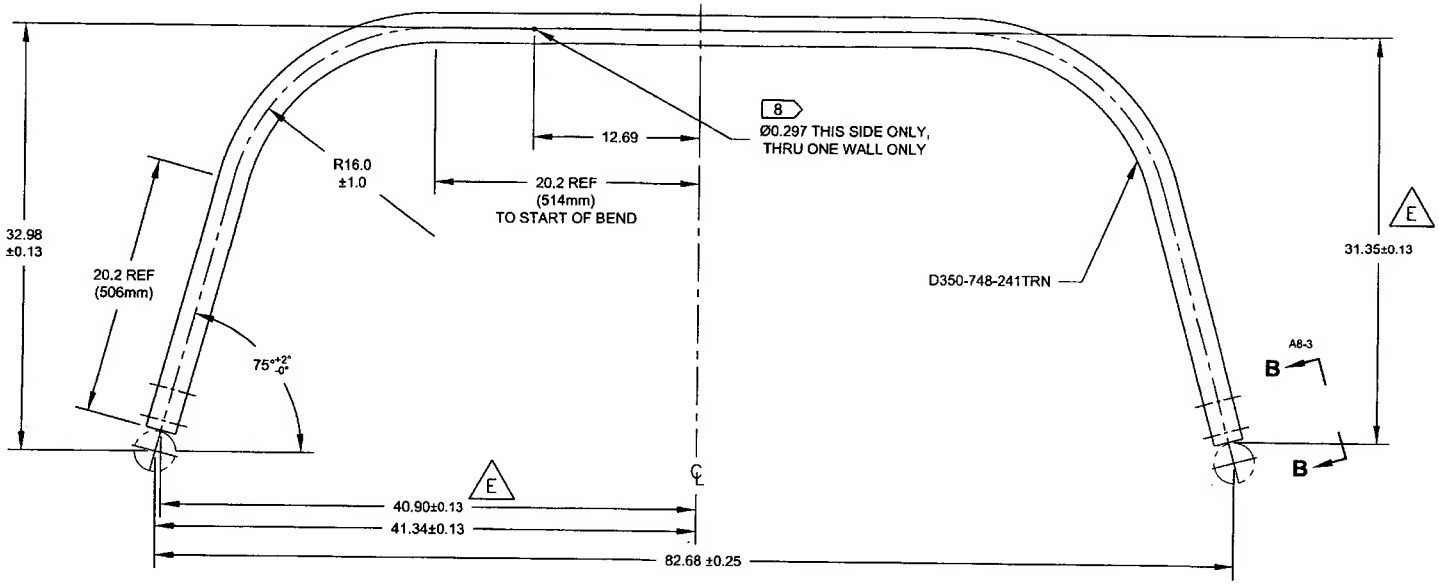

D350-748-241
BENDING AND DRILLING DETAIL 10

w/ 039171

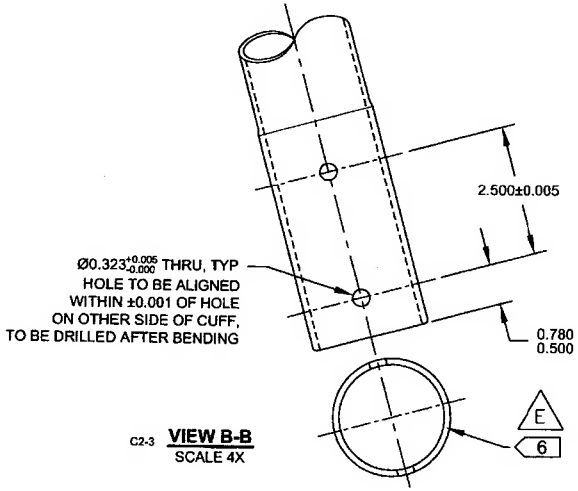

C2-3 **VIEW B-B**
SCALE 4X

RELEASED
2009 -10- 29
MP

DESIGN		**DART AEROSPACE LTD** HAWKESBURY, ONTARIO, CANADA
DRAWN	RF	
CHECKED		DRAWING NO. REV. E
MFG. APPR.		D350-748-241 SHEET 3 OF 4
APPROVED		TITLE SCALE
DE APPR.		CROSSTUBE (AS 350/355 HI AFT) NTS
DATE	09.09.30	

COPYRIGHT © 2006 BY DART AEROSPACE LTD
THIS DOCUMENT IS PRIVATE AND CONFIDENTIAL AND IS SUPPLIED ON THE EXPRESS CONDITION THAT IT IS NOT TO BE USED FOR ANY PURPOSE OR COPIED OR COMMUNICATED TO ANY OTHER PERSON WITHOUT WRITTEN PERMISSION FROM DART AEROSPACE LTD.

Dart Aerospace Ltd

W/O:		WORK ORDER CHANGES					
DATE	STEP	PROCEDURE CHANGE	By	Date	Qty	Approval Chief Eng / Prod Mgr	Approval QC Inspector

Part No: _____ **PAR #:** _____ **Fault Category:** _____ **NCR:** Yes No **DQA:** _____ **Date:** _____

Resolution: _____ **Disposition:** _____ **QA: N/C Closed:** _____ **Date:** _____

NCR:		WORK ORDER NON-CONFORMANCE (NCR)						
DATE	STEP	Description of NC Section A	Corrective Action Section B			Verification Section C	Approval Chief Eng	Approval QC Inspector
			Initial Chief Eng	Action Description Chief Eng	Sign & Date			

NOTE: Date & initial all entries

H:\fFORMS\Quality Assurance\approved QA\NCRWO RevE

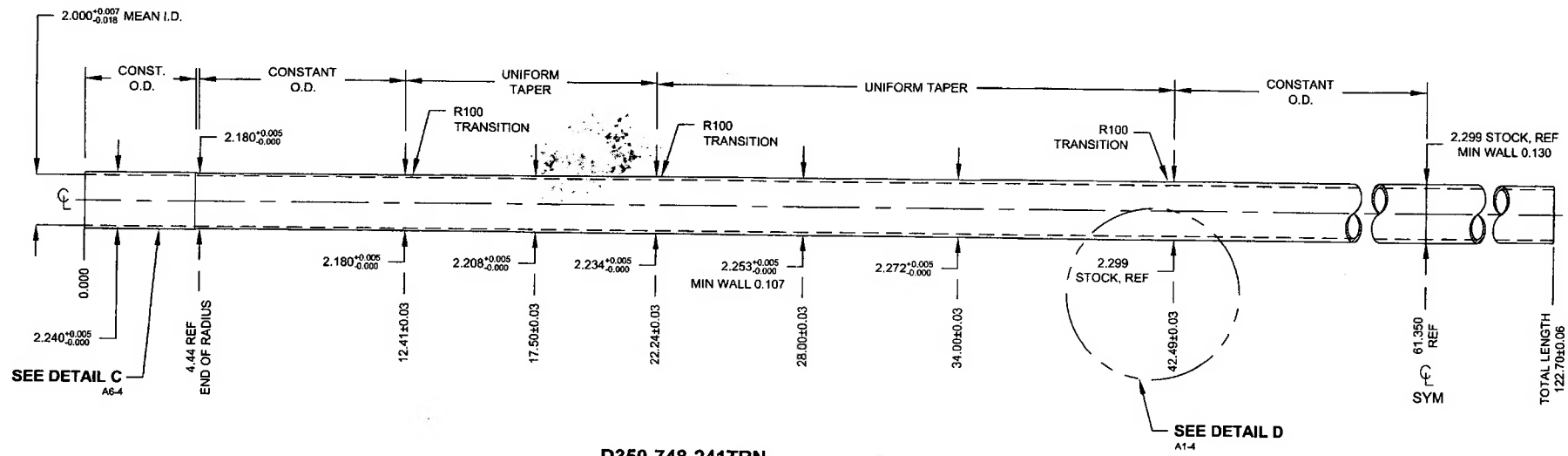

D350-748-241TRN
TURNING DETAIL

w/o 59171

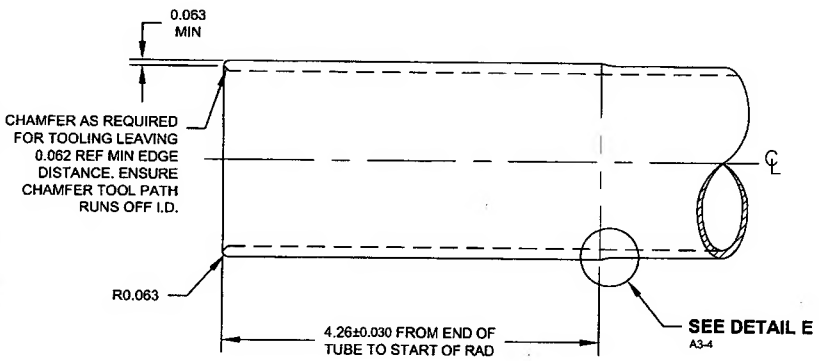

DETAIL C:
CROSSTUBE CUFF C8-4
SCALE 3X

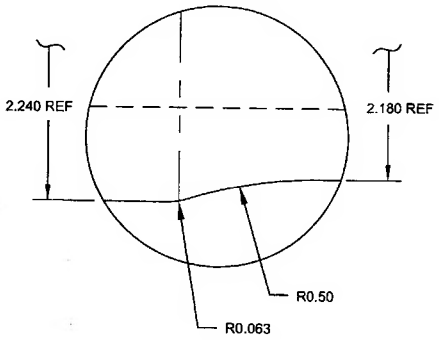

DETAIL E:
CUFF TRANSITION A5-4
NOT TO SCALE

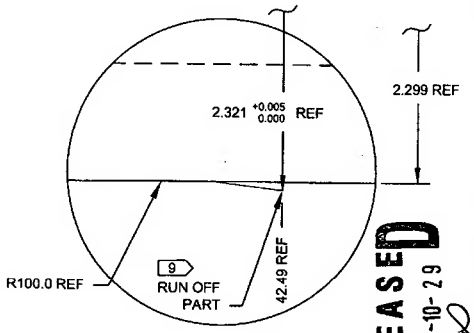

DETAIL D:
TAPER RUN-OFF C3-4
NOT TO SCALE

RELEASED 2009-10-29

DESIGN	GP	**DART AEROSPACE LTD** HAWKESBURY, ONTARIO, CANADA
DRAWN	RF	
CHECKED	GP	DRAWING NO. D350-748-241 — REV. E — SHEET 4 OF 4
MFG. APPR.		
APPROVED		TITLE: CROSSTUBE (AS 350/355 HI AFT) — SCALE: NTS
DE APPR.		
DATE	09.09.30	

COPYRIGHT © 2006 BY DART AEROSPACE LTD
THIS DOCUMENT IS PRIVATE AND CONFIDENTIAL AND IS SUPPLIED ON THE EXPRESS CONDITION THAT IT IS NOT TO BE USED FOR ANY PURPOSE OR COPIED OR COMMUNICATED TO ANY OTHER PERSON WITHOUT WRITTEN PERMISSION FROM DART AEROSPACE LTD.

Dart Aerospace Ltd

W/O:		WORK ORDER CHANGES					
DATE	STEP	PROCEDURE CHANGE	By	Date	Qty	Approval Chief Eng / Prod Mgr	Approval QC Inspector

Part No: _____ PAR #: _____ Fault Category: _____ NCR: Yes No DQA: _____ Date: _____

Resolution: _____ Disposition: _____ QA: N/C Closed: _____ Date: _____

NCR:		WORK ORDER NON-CONFORMANCE (NCR)						
DATE	STEP	Description of NC Section A	Corrective Action Section B			Verification Section C	Approval Chief Eng	Approval QC Inspector
			Initial Chief Eng	Action Description Chief Eng	Sign & Date			

NOTE: Date & initial all entries

H:\fFORMS\Quality Assurance\approved QA\NCRWO RevE